HAUSNET S.R.L.
Tel Argentina: (+54-11) 5219-2211
Tel Chile: (+56-2) 2897-3999
E-Mail: hausnet@hausnet.com.ar
Web: www.hausnet.com.ar

PHILEMON™

HAUSNET

CATALOG
ULTRASONIC LEVEL METER

Remote type

KAIFENG PHILEMON INSTRUMENT CO.LTD
No.1 Wangbai Road,Huanglong Industrial Zone,Kaifeng,China
TEL:86 - 371 - 26665538 FAX:86 - 371 - 26669963

❖ Overview

The series is a standard remote ultrasonic level meter for continuous non-contact level measurement in liquids and solids. It consists of probe and host, both of which are plastic leak-proof structure. The series can be widely applied to the metallurgical, chemical, electricity and oil industries.

❖ Features

- Continuous non-contact level measurement with remote version;
- Measuring range up to 40m (in liquid);
- The cable between probe and host up to 1000m;
- Excellent anti-interference capability;
- RS485 serial communication;
- System integration via **MODBUS.**

.

❖ Principle

The sensor of the meter pulses in the direction of the product surface. There, they are reflected back and received by the sensor.The meter measures the time t between pulse transmission and reception. The meter uses the time t (and the velocity of sound) to calculate the distance D between the sensor membrane and the product surface:
D = c •t/2. As the device knows the empty distance H from a user entry, it can calculate the level as follows: L= H – D.

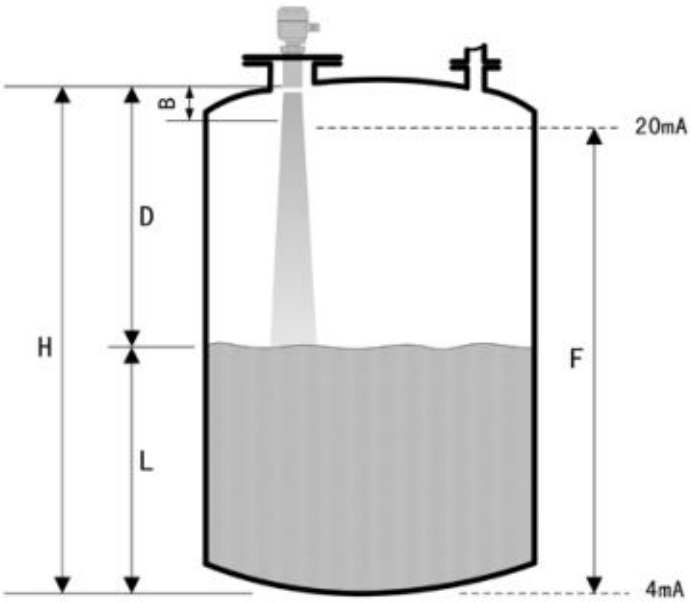

B:Blanking distance D:distance value L:level value
H: installation height F:level span

The ultrasonic velocity in gas is influenced by the gas temperature,So the level meter need to detect the gas temperature at work. So the material level meter need to detect the gas temperature at work,compensation for sound velocity.
Blanking distance: Span F may not extend into the blanking distance B. Level echo from
the blanking distance cannot be evaluated due to the transient characteristics of the sensor.

❖ Structure

The series is consists of a probe and a host.

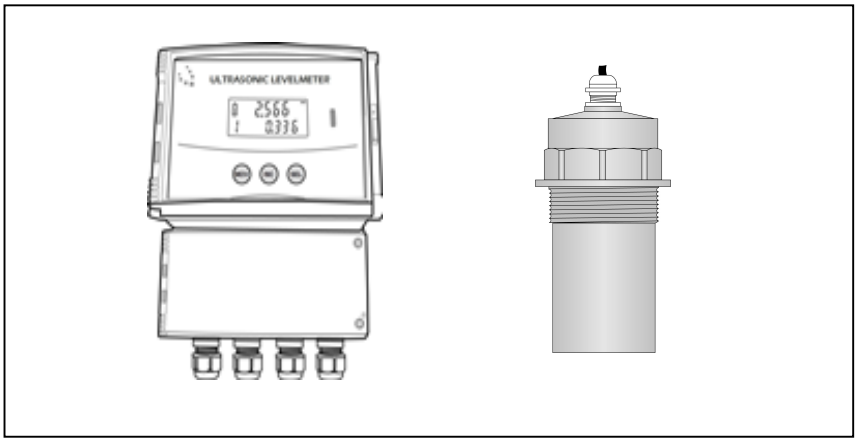

4m、6m、8m

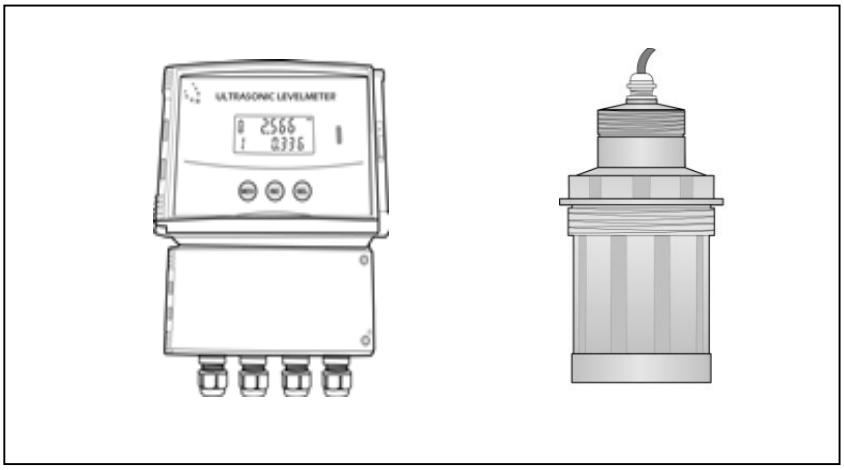

10m、12m、20m、30m、40m

❖ Product Introduction

The host:

Type	(host)
Power supply	DC24V (±5%) 0.1A AC220V (±20%) 0.1A
Display	4 digit LCD or 6 digit LED
Accuracy	0.2% of full span (in air)
Output current	4-20mA /4-20mA&RS485/4-20mA&Alarm
Serial communication	Modbus/HART
Output load	0-500Ω
Temperature range	-40℃~+80℃
Pressure range	±0.1MP (press definitely)
Measure cycle	1 second (changeable)
Parameter set up	3 induction buttons / remote control
Cable connection	PG9、 PG13.5
Material	ABS
Protect grade	IP67
Fix	Hang

The probe:

LB-4、LB-6、LB-8 Technical data

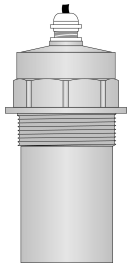	Measuring range	LB-4:0-4m blacking distance:20cm LB-6:0-6m blacking distance:25cm LB-8:0-8m blacking distance:30cm
	Temperature range	-40℃~80℃
	Pressure range	±0.1MP (press definitely)
	Beam angle	8°（3db）
	Material	ABS/PTFE
	Protect grade	IP65
	The length of cable	10m(standard)
	Fix	Flange /screw

LB-10m、LB-12 LB-20、LB-30、LB-40 Technical data

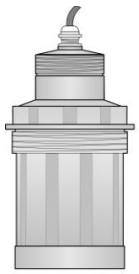	Measuring range	LB-12:0-12m blacking distance:35cm
	Temperature range	-40℃~80℃
	Pressure range	±0.1MP (press definitely)
	Beam angle	5°（3db）
	Material	ABS
	Protect grade	IP65
	The length of cable	10m(standard)
	Fix	Flange/screw

❖ Dimension

- The host

Shell lock (upward pull)

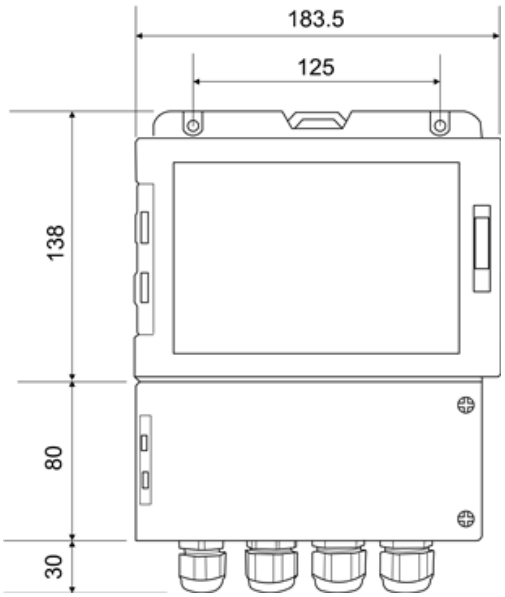

Installation location of hanging board

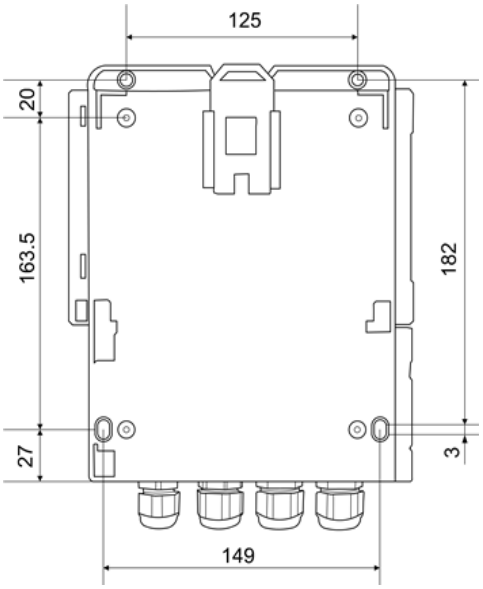

- The probe

4m、6m、8m

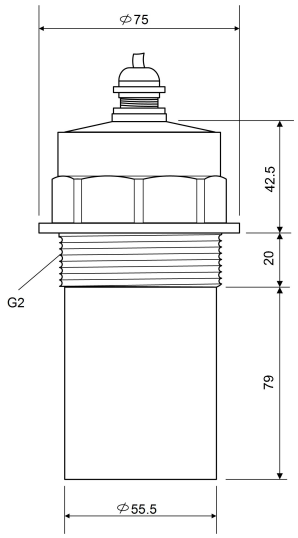

10m、12m

20m、30m、40m

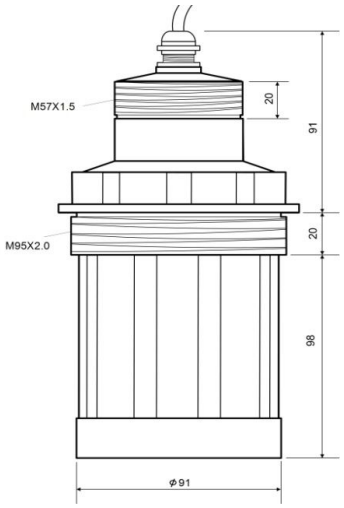

QLF Series

Technical Index

QLF4：	4.00m (Dead Zone:0.20m)
QLF6：	6.00m (Dead Zone:0.25m)
QLF8：	8.00m (Dead Zone:0.30m)
QLF10：	8.00m (Dead Zone:0.40m)
QLF12：	12.00m (Dead Zone:0.50m)
QLF20：	20.00m (Dead Zone:0.80m)
QLF30：	30.00m (Dead Zone:1.20m)
QLF40：	40.00m (Dead Zone:1.50m)
Accuracy：	0.2% Full span (In air)
Display Resolution：	QLF4、QLF6、QLF8、QLF10：1mm QLF12、QLF20、QLF30、QLF40：1cm
Mode of Indication：	4 Digit LCD
Output Current：	DC4~20mA
Relay Output:	Close/Open ,Two points (Max 5 points)
Serial Protocol：	RS485(Modbus,profibus,HART)
Baud Rate：	19200/9600/4800
Output Load：	0~500Ω
Output Resolution：	0.03% Full span
Relays：	2；5A 250VAC/30VDC
Parameter set up：	4 induction buttons

❖ Model Selection

- **Model Selection**

Measure range:
QLF4、QLF6、QLF8、QLF10、QLF12、QLF20、QLF30、QLF40
Power Supply
D DC24V(±10%) 0.1A A AC85~265V 50mA
Energy Transducer Material/Process Temperature/Protection Grade
A ABS/(-40-75)℃/IP67 B PVC/(-40-75)℃/IP67 C PTFE/(-40-75)℃/IP67
Process Connection/Material
G Thread D Flange /PP
Electronic Unit
2 4~20mA/24V DC Two Wire 3 4~20mA/24V DC /HART Two Wire 4 4~20mA/24V DC /RS485 Modbus Four Wire 5 4~20mA/24VDC /Alarm Output Four Wire
Shell / Protection Grade
L AL/ IP67
Cable Entry
M M20*1.5

HAUSNET